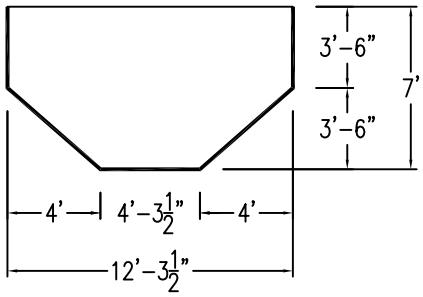

MISCELLANEOUS INFORMATION

PERIMETER:-	84'-9 1/2"		
SURFACE AREA:	418.8	SQ FT	
VOLUME: 10800 IMP GALS	49142	L	

CONCRETE DECK INFO

WIDTH	AREA	NET INCREASES FOR: STEPS	DIVING	SLIDE	ROLLER
2'	183	13	27	24	10
2'6"	232	17	31	20	10
3'	283	20	36	16	10
All Figures Represent "Sq Ft"					

PARTS LIST

CODE	QTY	DESCRIPTION
8-s	1	8' Skimmer
4-i	1	4' Return
7-i	1	7' Return
8	4	8' Plain
3'	5	3' Plain
26	1	2'6" Plain
6"	1	6" Plain
17R2	9	1'7" Plain x 2' Radius
17R2R	1	1'7" Plain x 2' Reverse Rad
AF	24	A-Frame
S	48	Stake
NB	144	Nuts & Bolts

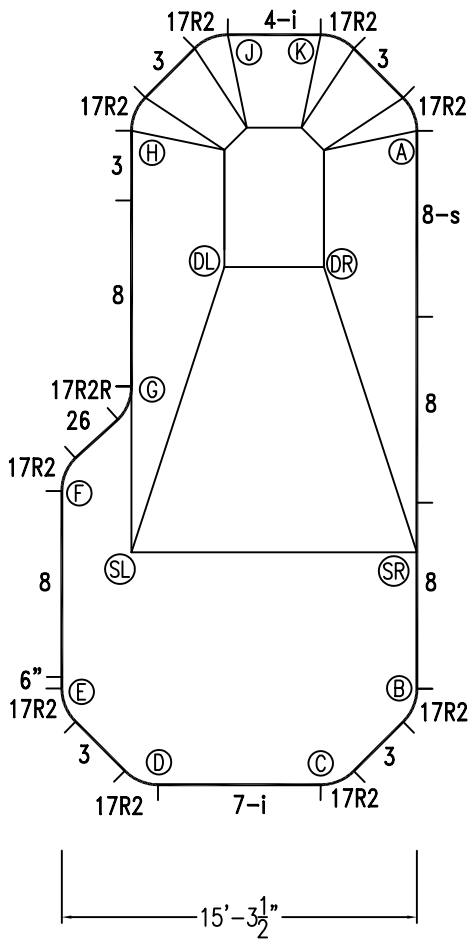

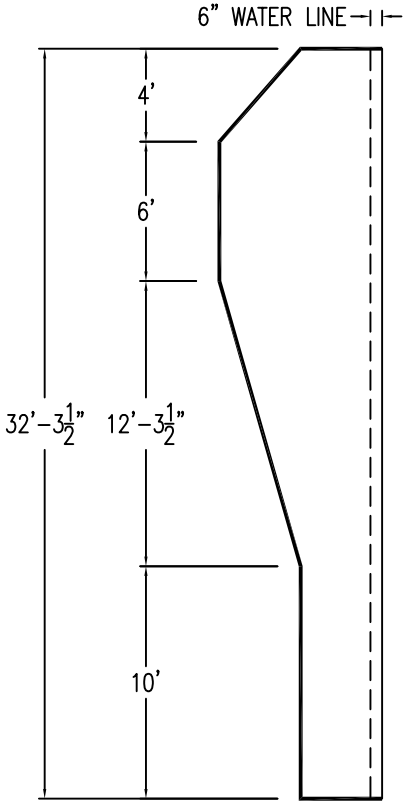

*ALL DIMENSIONS ARE FINISHED

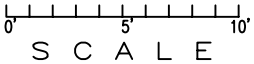

INSTALLATION DATA

From Point "A" to:-		From Point "B" to:-	
B	24'-0"	B	
C	28'-5 1/4"	C	5'-10 1/4"
D	30'-3 1/8"	D	11'-10 5/8"
E	29'-4 1/4"	E	14'-9 1/8"
F	21'-9 1/8"	F	17'-5 7/8"
G	16'-6"	G	17'-10 3/8"
H	12'-3 3/8"	H	26'-11 5/8"
J	9'-1 5/8"	J	29'-3 1/2"
K	5'-10 1/4"	K	28'-5 1/4"
SL	21'-10 7/8"	SL	13'-7 3/8"
SR	18'-1 5/8"	SR	5'-10 3/8"
DL	10'-1 3/4"	DL	19'-11 1/4"
DR	7'-1 1/8"	DR	18'-6 7/8"

NOTICE

SWIMMING POOLS AND ACCESSORIES (INCLUDING DIVING BOARDS) ARE DANGEROUS WHEN IMPROPERLY USED OR INSTALLED. IT IS THE RESPONSIBILITY OF MUNCIPAL OFFICIALS, BUILDERS AND POOL OWNERS TO ADHERE TO ALL SAFETY RECOMMENDATIONS AND STANDARDS ISSUED BY THE POOL & HOT TUB COUNCIL, LOCAL AUTHORITIES AND EQUIPMENT MANUFACTURERS. PLEASE REFER TO DIVING BOARD MANUFACTURERS FOR CORRECT POSITIONING AND INSTALLATION OF DIVING EQUIPMENT.

HIGHBURY POOLS LTD	PARADISE-LEFT 13 x 16 x 32	DRAWING REFERENCE # 57-16-32-1	DRAWN BY: BC REV. 15 DEC 2006 SHEET 1 OF 2

EXTERNAL INSTALLATION DATA

AA TO:		BB TO:		CC TO:		DD TO:	
AA	--	AA	32'-4 1/8"	AA	15'-4 1/4"	AA	35'-9 5/8"
BB	--	BB	--	BB	35'-9 5/8"	BB	15'-4 1/4"
CC	--	CC	--	CC	--	CC	32'-4 1/8"
A	15'-11 1/8"	A	32'-0 5/8"	A	4'-2 1/2"	A	28'-1 5/8"
B	32'-1 3/8"	B	15'-10 7/8"	B	28'-2 1/2"	B	4'-1 5/8"
C	34'-2 3/4"	C	11'-2 5/8"	C	32'-7 1/4"	C	4'-1 3/4"
D	32'-7 3/8"	D	4'-2 5/8"	D	34'-2 1/2"	D	11'-1 3/4"
E	28'-2 3/8"	E	4'-1 5/8"	E	32'-0 7/8"	E	15'-10"
F	19'-8 3/8"	F	12'-7 5/8"	F	24'-11 3/4"	F	19'-10 5/8"
G	15'-6 3/8"	G	17'-4 5/8"	G	19'-6 3/4"	G	21'-0 3/4"
H	5'-2 3/8"	H	28'-3 3/4"	H	12'-11 3/4"	H	30'-8 1/2"
J	7'-2 5/8"	J	33'-0 7/8"	J	8'-1 5/8"	J	33'-3 3/8"
K	11'-2 5/8"	K	34'-2"	K	4'-1 5/8"	K	32'-6 1/2"
SL	22'-6 5/8"	SL	10'-5 5/8"	SL	25'-5 7/8"	SL	15'-10 1/8"
SR	27'-1 1/4"	SR	18'-3 7/8"	SR	22'-4 1/8"	SR	10'-0"
DL	12'-3 5/8"	DL	23'-4 1/2"	DL	13'-0 3/8"	DL	23'-9 1/4"
DR	15'-2 1/8"	DR	25'-0"	DR	10'-9 7/8"	DR	22'-7 5/8"

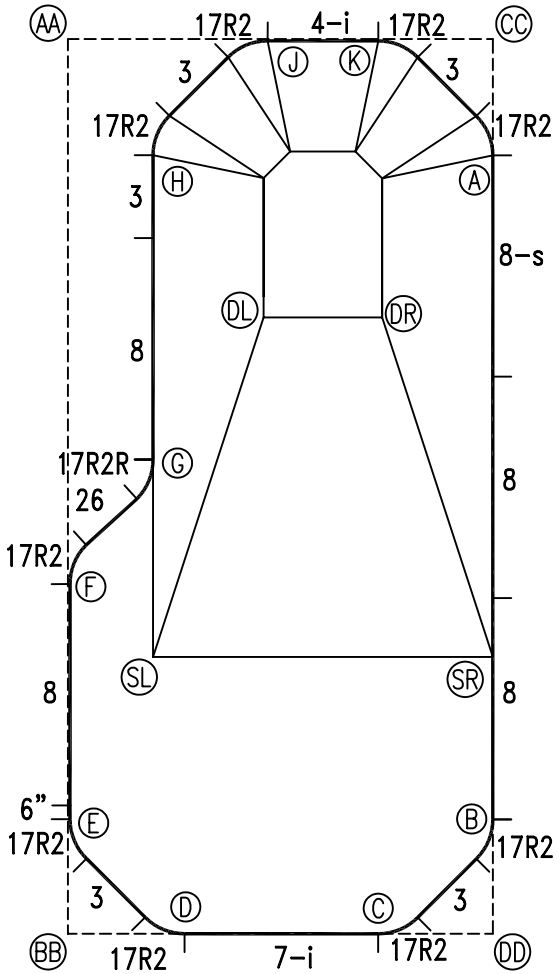

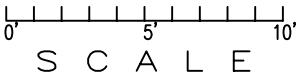

NOTICE

SWIMMING POOLS AND ACCESSORIES (INCLUDING DIVING BOARDS) ARE DANGEROUS WHEN IMPROPERLY USED OR INSTALLED. IT IS THE RESPONSIBILITY OF MUNCIPAL OFFICIALS, BUILDERS AND POOL OWNERS TO ADHERE TO ALL SAFETY RECOMMENDATIONS AND STANDARDS ISSUED BY THE POOL & HOT TUB COUNCIL, LOCAL AUTHORITIES AND EQUIPMENT MANUFACTURERS. PLEASE REFER TO DIVING BOARD MANUFACTURERS FOR CORRECT POSITIONING AND INSTALLATION OF DIVING EQUIPMENT.

HIGHBURY POOLS LTD	PARADISE-LEFT 13 x 16 x 32	DRAWING REFERENCE # 57-16-32-1	DRAWN BY: BC
			REV. 15 DEC 2006
			SHEET 2 OF 2