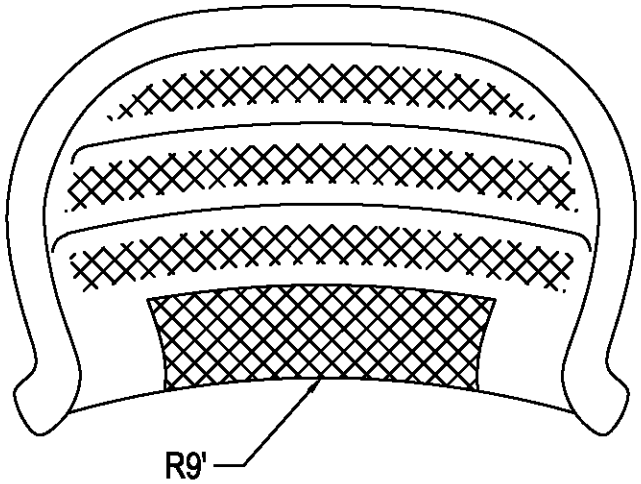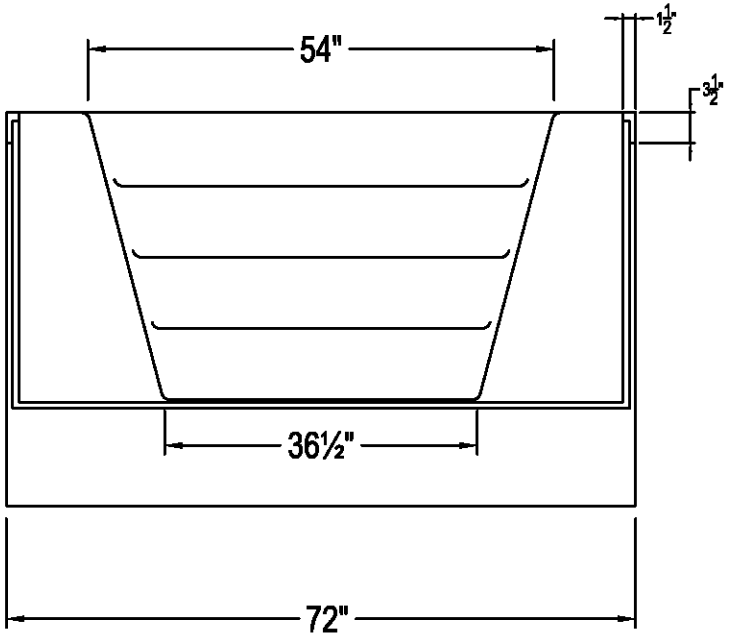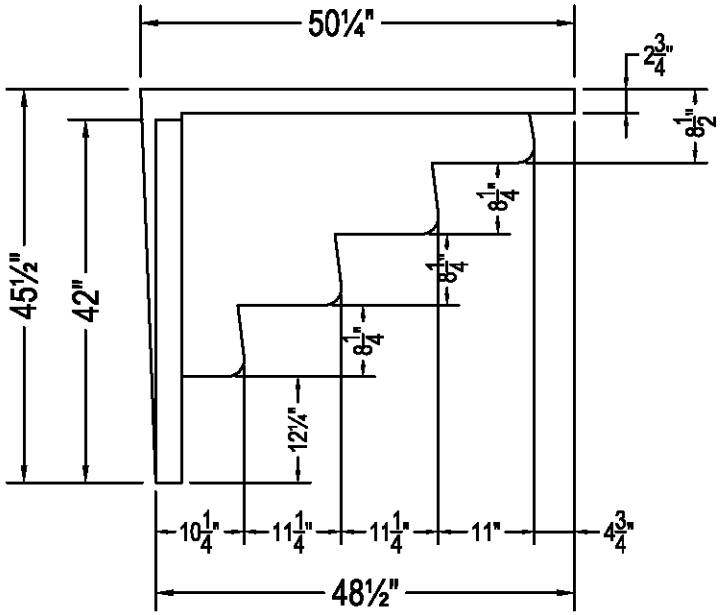HIGHBURY POOLS LTD.
6' STAIR RADIUS
STAHPL69